Standard specifications

BU015N*E51

1st Edition : September 03, 2019

KAWASAKI HEAVY INDUSTRIES, LTD.

ROBOT DIVISION

Specification :	90101-2928DEA
(Arm) :	90151-0311DEA
(Controller) :	90152-0054DEA

*・・・F,G,R,S…

Materials and specifications are subject to change without notice.

[1] Robot Arm

1. Model	BU015N-C
2. Type	Articulated robot
3. Degree of freedom	6 axes

4. Axis specification

Operating axis		Max. operating range	Max. speed
Arm rotation	(JT1)	＋180°～－180°	250°/s
Arm out-in	(JT2)	＋140°～－105°	250°/s
Arm up-down	(JT3)	＋155°～－120°	215°/s
Wrist swivel	(JT4)	＋210°～－210°	280°/s
Wrist bend	(JT5)	＋120°～－120°	280°/s
Wrist twist	(JT6)	＋360°～－360°	360°/s

5. Repeatability	±0.04 mm (at the tool mounting surface)
6. Max. payload	15 kg
7. Max. speed	5000 mm/s (at the center of tool mounting surface)

8. Load capacity of wrist

	Max. torque	Moment of inertia*
JT4	27.0 N·m	0.70 kg·m^2
JT5	27.0 N·m	0.70 kg·m^2
JT6	22.0 N·m	0.25 kg·m^2

Note* Each value in this table shows allowable moment of inertia of JT4/JT5/JT6 when max. allowed torque is applied to each axis. If more detailed data is required for your application, please contact Kawasaki.

9. Driving motor	Brushless AC Servomotor
10. Position detector	Absolute encoder
11. Working range	See attached drawing
12. Mass	160 kg (without options)
13. Color	Munsell 10GY9/1 equivalent
14. Installation	Floor
15. Environment cond.	(Temperature) 0 ～45 °C, (Humidity) 35 ～ 85 %, no dew, nor frost allowed
16. Options	Adjustable mechanical stoppers JT1
	Color (Munsell)
	Traverse unit (Stroke mm)
	Arm installation stand (height 600 mm, 300 mm)
	Arm installation plate (750 mm×750 mm)
17. Others	Consult Kawasaki about maintenance parts and spare parts.

〔2〕Controller			
1.	Model	E51	
2.	Enclosure	Enclosed structure / Indirect cooling system	
3.	Dimensions	See attached drawing	
4.	Number of controlled axes	7 axes 8/9 axes (built-in addition, option), Max.15 axes (external additional amplifier, option)	
5.	Servo control and drive system	Full Digital Servo System	
6.	Type of control	Teach mode	Joint, Base, Tool, Fixed Tool (option) operation mode
		Repeat mode	Joint, Linear, Circular (option) interpolation
7.	Teaching method	Teaching or AS language programming	
8.	Memory capacity	8 MB	
9.	External operation signals	External Emergency stop, External Hold, etc.	
10.	General purpose signals	Input signals	32 channels（Includes dedicated signals）
		Output signals	32 channels（Includes dedicated signals）
11.	Operation panel	Teach/Repeat SW, Emergency Stop SW, Control power lamp	
12.	Cable length	Power/Signal cable	5m
		Teach Pendant cable	5m
13.	Mass	See attached drawing	
14.	Power requirement	AC200 - AC220 V±10%, 50/60 Hz, 3 phases, Max 5.6 kVA	
15.	Ground	Less than 100 Ω (robot dedicated ground) Leakage current: max. 100 mA	
16.	Ambient temperature	0 - 45 ℃	
17.	Relative humidity	35 - 85%（non-condensation）	
18.	Color	Munsell: 10GY9/1 equivalent	
19.	Teach Pendant	TFT color display (5.7 inch LCD) with touch panel Emergency Stop SW, Teach Lock SW and Enable SW	
20.	Motor brake release	Manual brake release switch	
21.	Safety Circuit	Category: 4, Performance Level: e (EN ISO13849-1)★	
22.	Options		
	General purpose signals	Input signals	64/96/128 channels
		Output signals	64/96/128 channels
	I/O connector	D-SUB 37pin (male, female) with cover	
	Arc Interface	Arc interface add-on board	
	Operation panel	Motor Power ON, Cycle start, RUN/HOLD, Error reset, Error lamp	
	Power/Signal cable	10 m, 15 m	
	Teach Pendant cable	10 m, 15 m	
	Auxiliary storage	USB memory	
	Transformer	AC380V-415V / AC440V-480V by tap selection	
	PC cable	1.5 m, 3 m	
	Extended safety functions	Cubic-S (Motion area monitoring, Joint monitoring, Speed monitoring etc.)	
	Teach Pendant option	Teach Pendant Stand, Cable hook, connector for TP less	
	Fast check mode	Fast check mode Switch	
	Others	Cooler, LED Light, Field BUS, Software PLC, Analog input/output, Conveyor Synchronization	
23.	Others	Consult Kawasaki about maintenance parts and spare parts.	

★ Category and Performance level (PL) are determined by the whole system and conditions.
The safety circuit of this controller is available in the system of category: up to 4, PL: up to e.

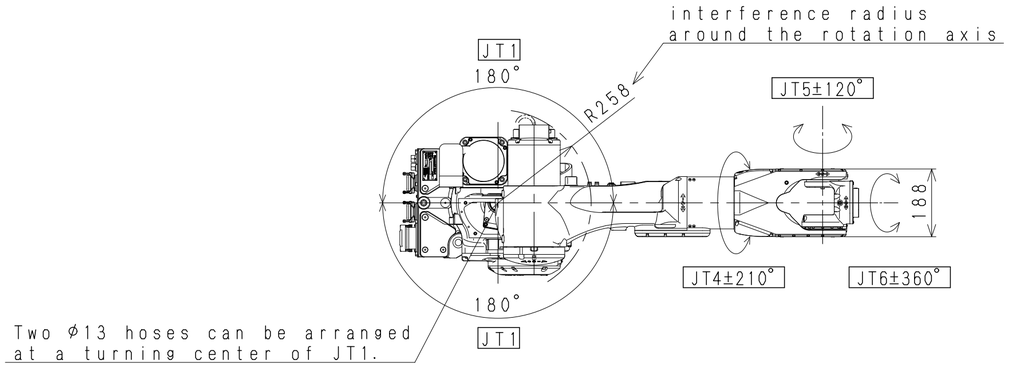

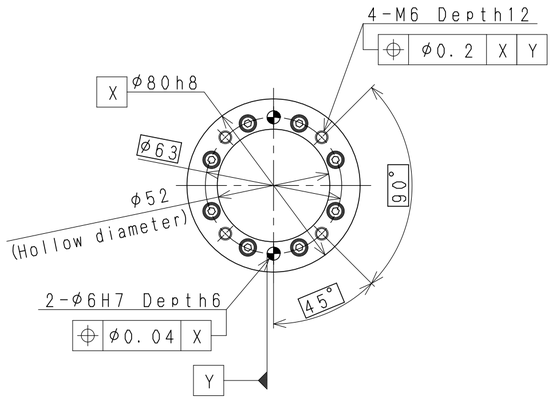

View A

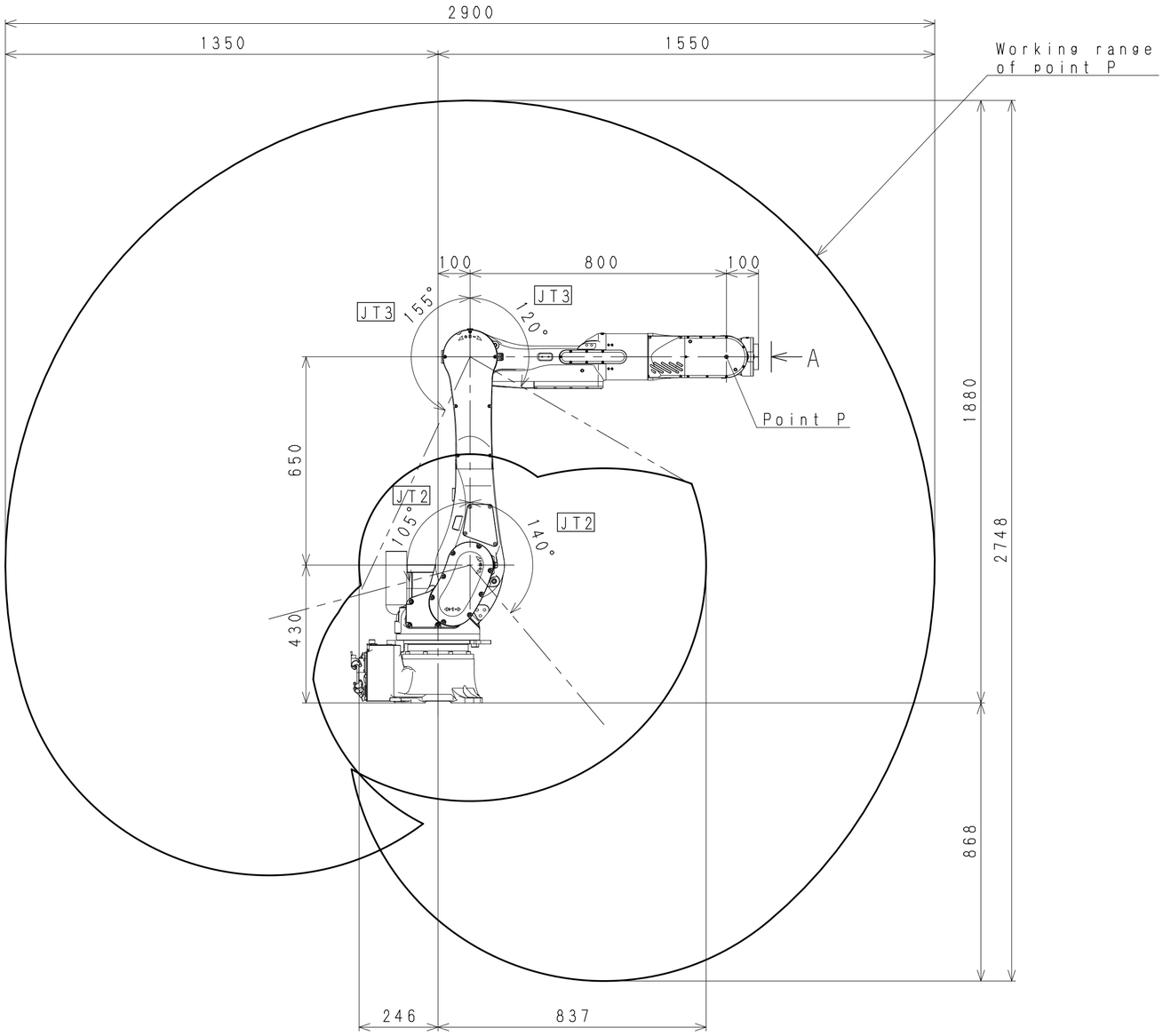

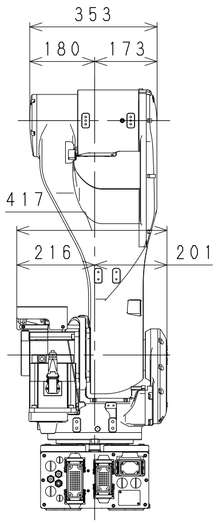

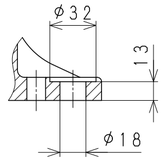

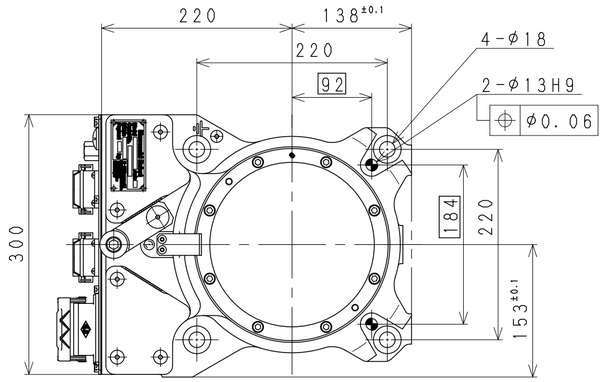

Installation dimensions

BU015N-C

WORKING RANGE

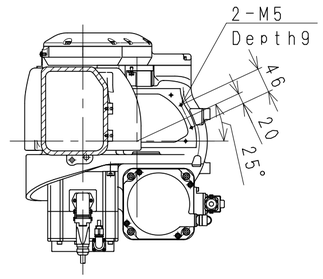

Section A-A

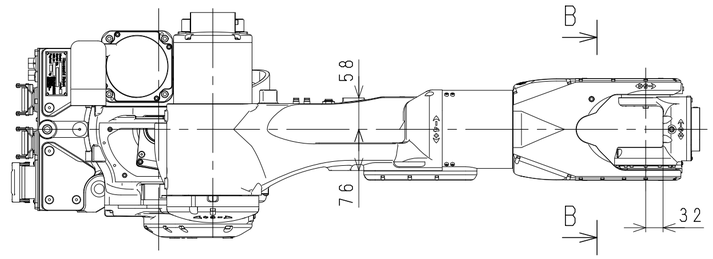

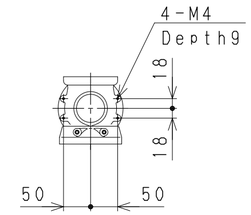

Section B-B

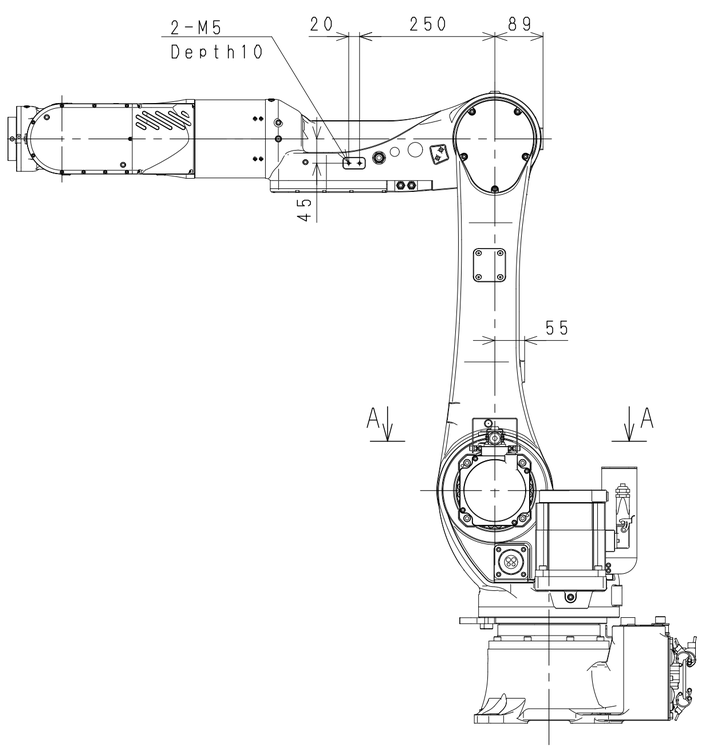

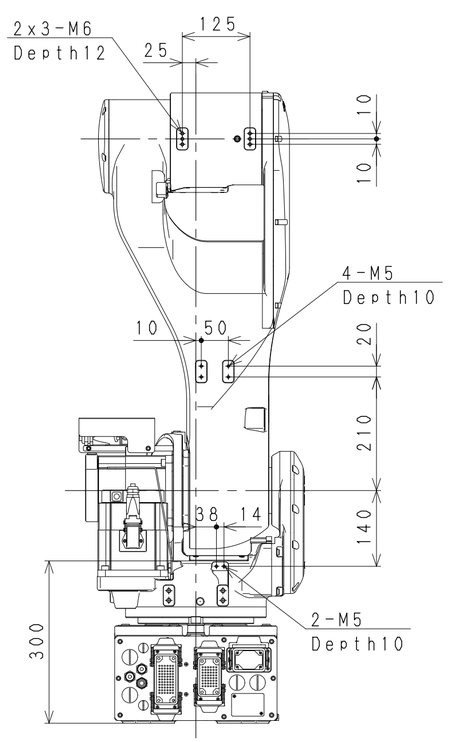

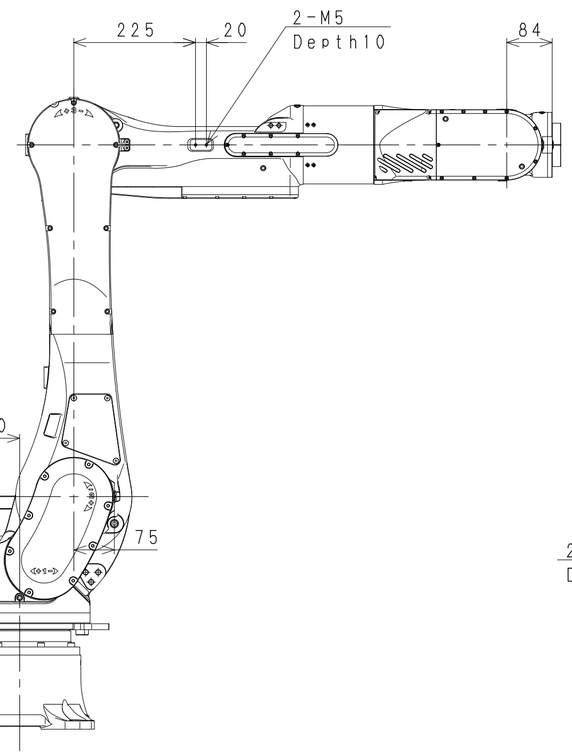

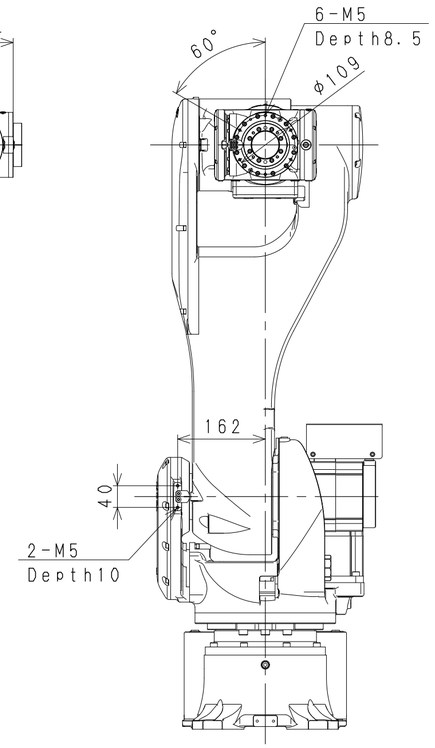

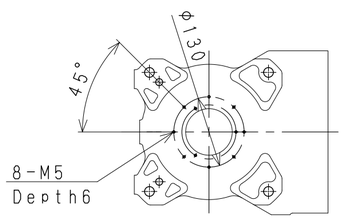

BU015N-C

Servise Tapped Hole Positions

E51 CONTROLLER

MASS:110kg(without primary power trans.)
MASS:140kg(with primary power trans.)

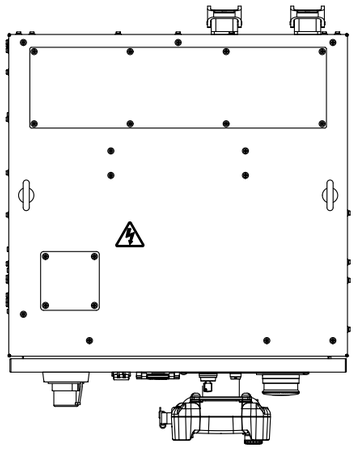

TOP VIEW

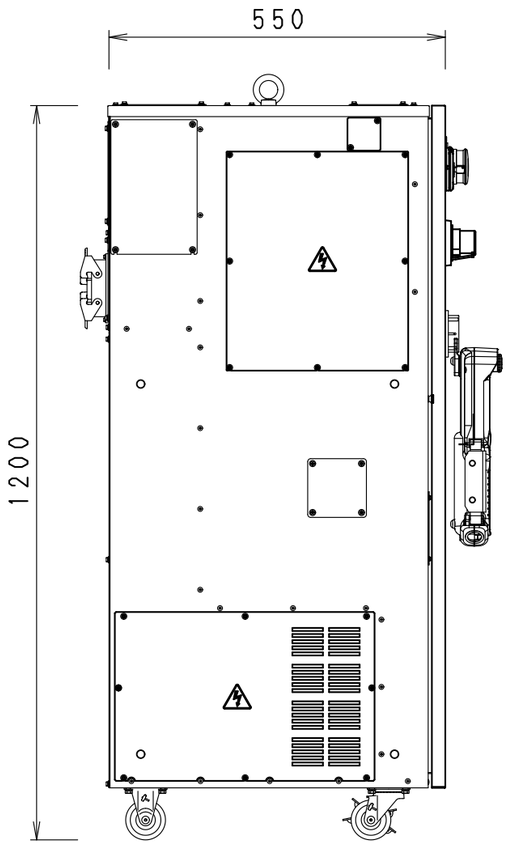

SIDE VIEW

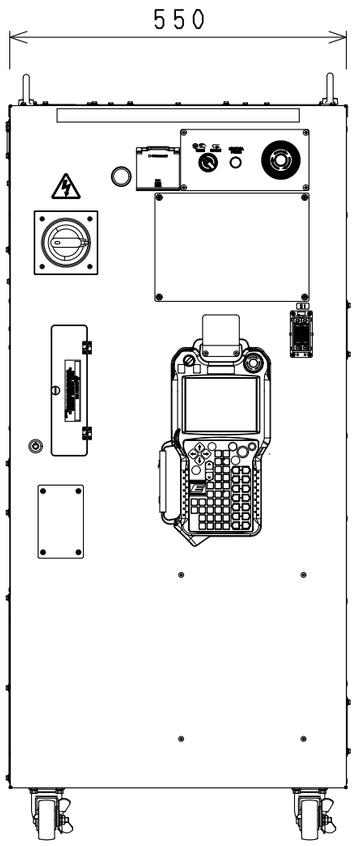

FRONT VIEW

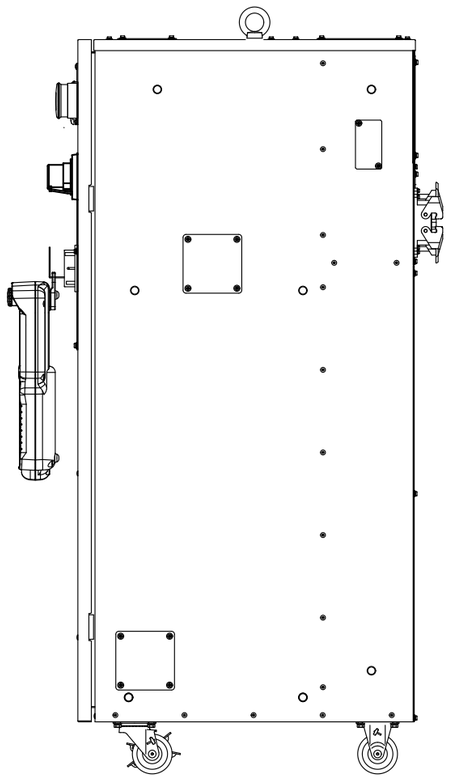

SIDE VIEW

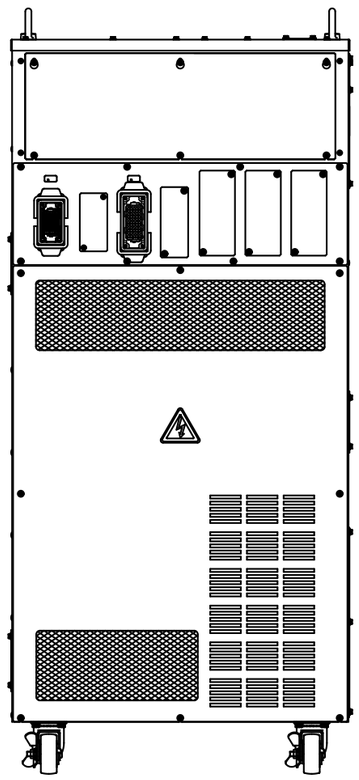

REAR VIEW